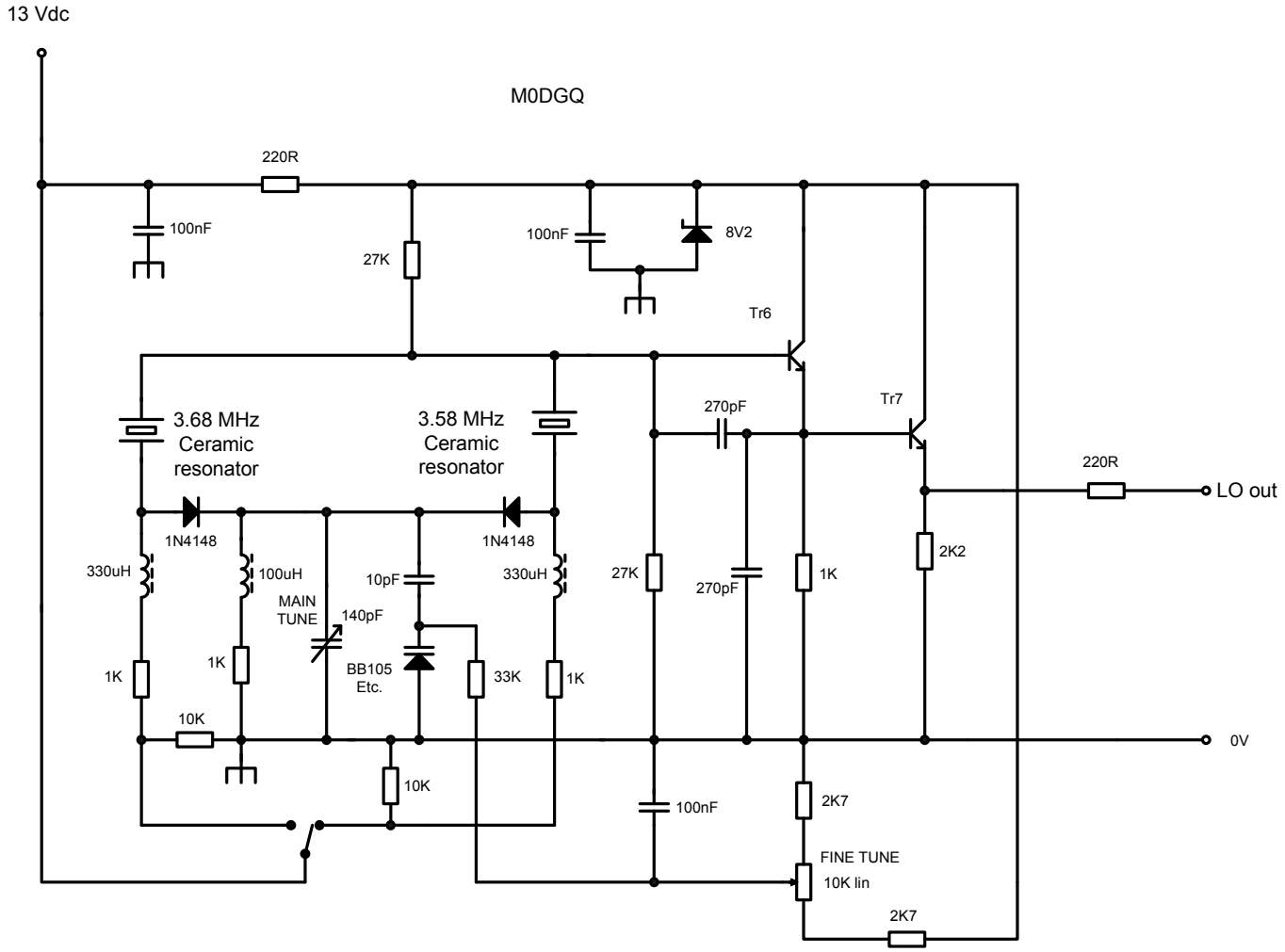
13 Vdc
M0DGQ
220R
100nF
27K
100nF
8V2
Tr6
3.68 MHz
Ceramic
resonator
3.58 MHz
Ceramic
resonator
270pF
Tr7
220R
LO out
1N4148
1N4148
330uH
100uH
10pF
330uH
27K
270pF
1K
2K2
MAIN
TUNE
140pF
1K
1K
BB105
Etc.
33K
1K
10K
0V
10K
100nF
2K7
FINE TUNE
10K lin
2K7